SECTION 2 ROLL CAGE

MATERIAL & DESIGN

OPTION

Effective for registration

Commencing 1st July 2019

Speedway Sedans Australia

Modified Sedans, Production Sedans, Street Stocks, Junior Sedans, National 4

Updated 01.07.2020 - v3

SECTION 2 ROLL CAGE

GENERAL

a) The roll cage is to provide a safe enclosed environment for the driver and is intended to prevent the collapse of the cabin area under impact.
b) The roll cage is to fully enclose the driver with the roll bar tubing that constitutes a cage type framework, braced fore and aft.
c) All bar work must be entirely inside the OEM glassed area of the cabin.
d) The cage must extend behind the driver's seat and forward to the windscreen area and incorporate adequate foot protection.
e) All A-leg and roof hoop options must be constructed so as the driver can enter and exit the car through the driver's side window aperture at all times. A-legs and other roll cage bracing that protrude through the driver's side window aperture that significantly impede the driver's ability to enter or exit the car will be deemed non-compliant. (01/07/2020)
f) All bends to be made using a bender with the correct size former using a cold working process with no evidence of crimping, wall failure or significant weakening. The centreline bend radius must be 3 times the tube diameter. If during the bending process the tubing is ovalized the ratio of minor to major diameter must be 0.9 or greater.
g) All bars to be suitably notched to accommodate correct assembly of roll cage.
h) All welding is to be of a high quality with adequate penetration using only gas shielded arc welding techniques. E.g. mig or tig. All joints to be fully welded.
i) Sonic Testing to be performed only on bare/unpainted surfaces and on a straight section of tube. It is the owner's responsibility to remove paint/powder coating if required. (Sonic Test at not less than 2.40mm ABSOLUTE)
j) For Production Sedans and Street Stocks with Optional Passengers:
Roll cage left hand side must mirror the right hand side and have full cruciform. Passenger handle for support is optional.

MATERIAL SPECIFICATION

a) Please refer to Minimum Dimensions Table below for bar size and types.
b) Minimum Cold Drawn Seamless (CDS) mild steel tube (CHS) with a minimum tensile strength of 350 MPA. Unless otherwise specified. (01/07/2020)
c) Where RHS is permitted all tube to be of AS1163 standard mild steel with a minimum tensile strength of 350 MPA.
d) No galvanising on any tube allowed.
e) All tube must display good elongation and welding properties.

DIMENSIONS TABLE

Bar #1	Main Hoop Bar	44.45 x 2.6mm	CHS
Bar #2	Roof Hoop Bar	44.45 x 2.6mm	CHS
Bar #3	Front A Legs / A Pillar Bar	44.45 x 2.6mm	CHS
Bar #4	Centre Roof Bar	38 x 2.6mm	CHS
Bar #5/6	Main Hoop Centre Spreader Bar	38 x 2.6mm	CHS
Bar #6/5	Seat Back/Shoulder Harness Bar	38 x 2.6mm	CHS
Bar #7	Main Hoop Diagonal Bars	38 x 2.6mm	CHS
Bar #8	NASCAR Door and Dropper Bars	38 x 2.6mm	CHS
Bar #9	Passenger Side Door Bars	38 x 2.6mm	CHS
Bar #10	Lower Windscreen Dash Bar	38 x 2.6mm	CHS
Bar #11	Centre Windscreen Bar (14/09/19)	25 x 2.6mm	CHS
Bar #12	Rearward Brace Bars	38 x 2.6mm	CHS
Bar #13	Foot Protection Bar	38 x 2.6mm	CHS
Bar #14	Foot Protection Support Bar (14/09/19)	25 x 2.6mm	CHS
Bar #15	Roll Cage Sub Frame Bar – these 3 choices are the only size and types of material accepted	44.45 x 2.6mm or 40 x 40 x 3.0 mm or 50 x 50 x 2.5mm	CHS RHS RHS
Bar #16	Lower Spreader Bar – Front	38 x 2.6mm	CHS
Bar #17	Lower Spreader Bar – Front Brace	38 x 2.6mm	CHS
Bar #18	Lower Spreader Bar - Rear	38 x 2.6mm	CHS
Bar #19	Lower Windscreen / Dash Bar Support - optional	38 x 2.6mm	CHS
Bar #20	Seat Base Mounting / Harness Mounting Bar	38 x 2.6mm	CHS
Bar #21	Rear Chassis Sub Frame Rail – these 3 choices are the only size and types of material accepted	44.45 x 2.6mm or 38 x 2.6mm or 40 x 40 x 2.5mm	CHS CHS RHS
Bar #22	Front Chassis Sub Frame Rail – optional – these 3 choices are the only size and types of material accepted	38 x 2.6mm or 40 x 40 x 2.5mm or 50 x 25 x 3mm	CHS RHS RHS
Item #23	Additional / Optional Roll Cage Supports / Bracing	25 x 2.6mm Minimum	CHS

POINT A	The point where top NASCAR door bar (Bar #8), A pillar leg (Bar #3) and lower windscreen dash bar (Bar #10) intersect – Refer Fig 3 (ii)
POINT B	The point where the top NASCAR door bar (Bar #8), Main Hoop (Bar #1) and Main Hoop Centre Spreader Bar (Bar #5) intersect – Refer Fig 3 (ii)
POINT C	The point where sub frame bar (Bar #15), base of A pillar leg (Bar #3) and lower spreader bar – front (Bar #16) intersect – Refer Fig 3 (ii)

Fig 3 (i)

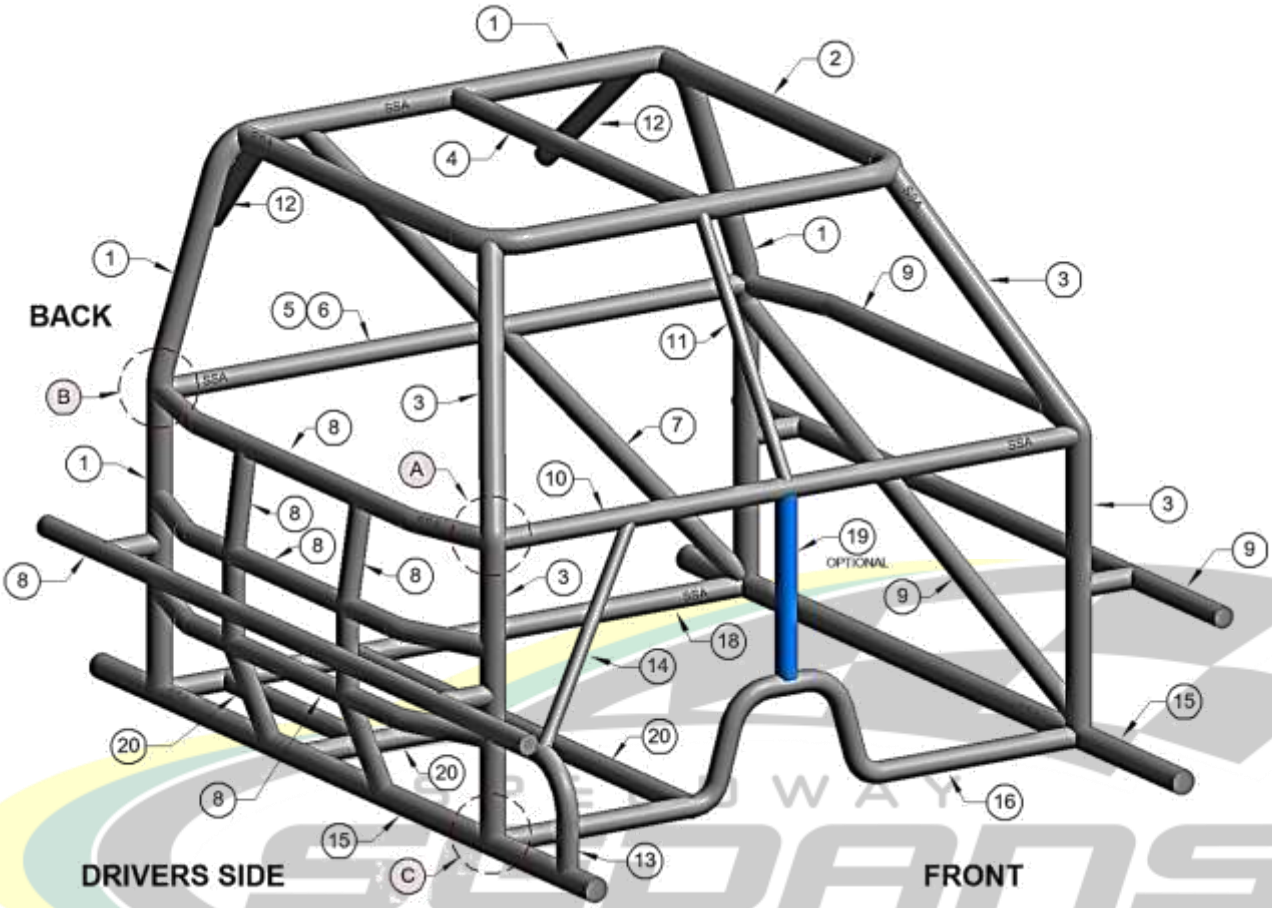

Fig 3 (ii)

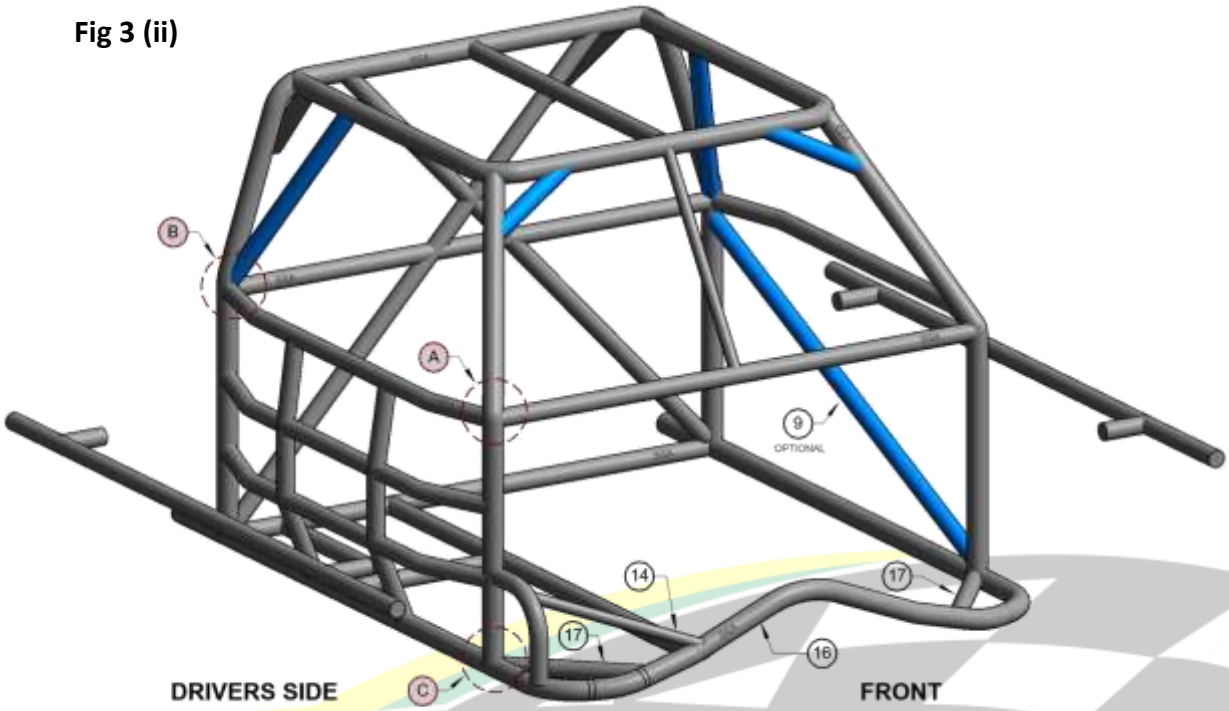

Fig 3 (iii) updated 01/07/2020

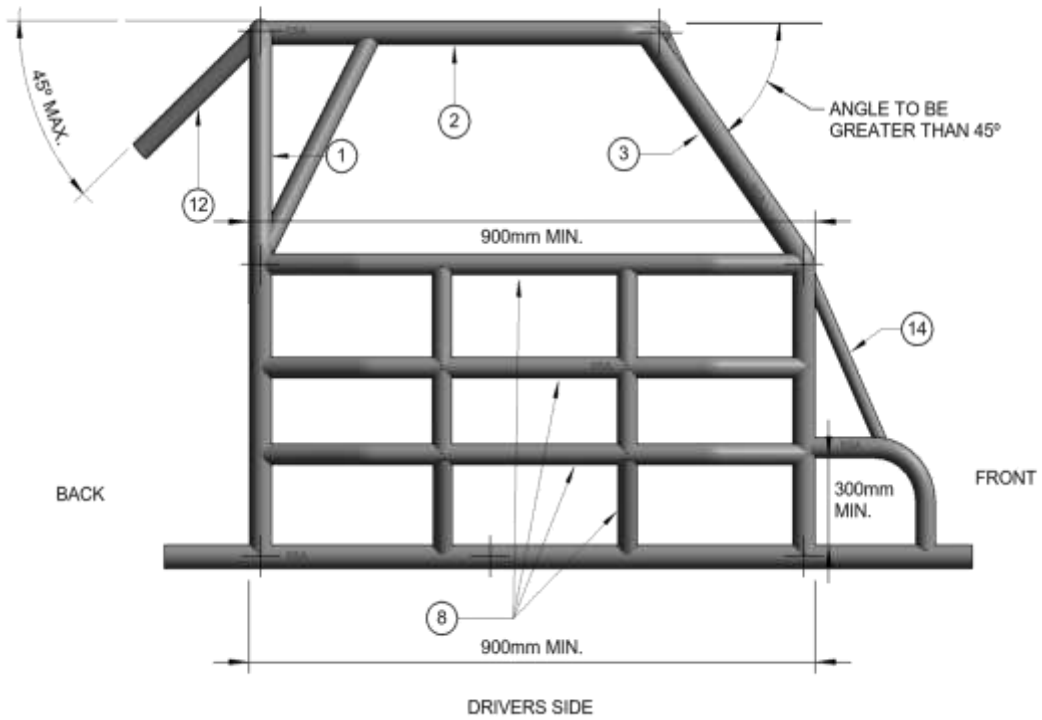

Fig 3 (iv) a

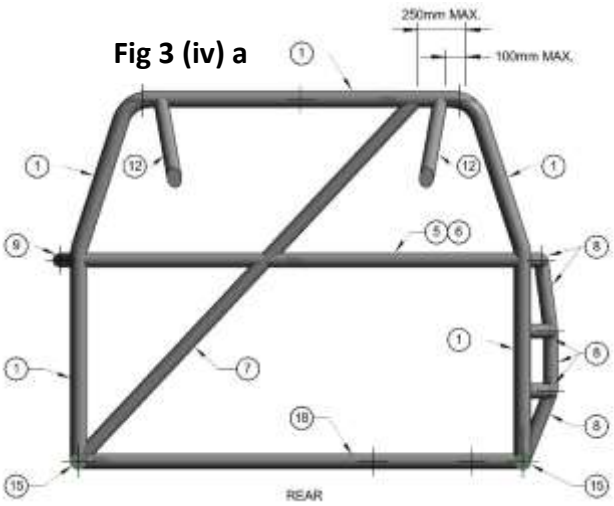

Fig 3 (iv) b

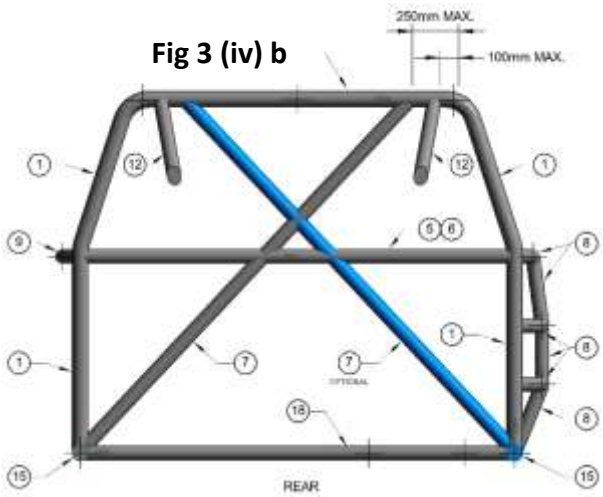

1. **Main Hoop Bar**: Bar #1

   The rear main hoop will be made of one continuous length of tubing. See Fig 3(i). Hoop to be within 50mm of sides of roof at the narrowest point, be within 50mm of the inside line of the 'B Pillar' measured at point 'B' of Fig 3 (i) and be completely inside the body line. The base of the hoop will be fitted square in the car. If the Main Hoop requires bending to meet the 50mm requirement at point 'B' then the bend can only be formed within 50mm of this point. The distance between the rear of the main hoop and the front of the A pillar front leg at the intersection with the sub frame rail and at rear of the main hoop and front A pillar leg at the intersection of top NASCAR bar to be minimum of 900mm.

2. **Roof Hoop Bar**: Bar #2

   Option 1: To be formed from one continuous length of tubing and be welded to the Main Hoop Bar (Bar #1) on each side of the roll cage. This bar incorporates the Top Windscreen Bar. The windscreen part of the Roof Hoop Bar to be no further rearward than 200mm from the front pinch weld lip of the front windscreen opening at narrowest point. (01/07/2020)

   Option 2: To be formed using the top part of the Front A Legs (option 2) and be welded to the Main Hoop Bar (Bar #1) on each side of the roll cage. A Windscreen bar is to be fitted and welded between the two A Legs Bars and be no further back than 200mm from the front pinch weld lip of the front windscreen opening at narrowest point. (01/07/2020)

3. **Front A Legs/A Pillar Bar: Bar #3 (01/07/2020)**

   GENERAL

   a) The A Pillar part of the front legs MUST BE GREATER THAN 45° (See Fig 3(iii))

   b) Be no further rearward than 300mm (250mm for Junior Sedans) behind and 50mm inwards of the OEM door opening at points A & C. Refer Fig 3 (i).

   c) When bending this bar to meet the sub frame rail the bend must be within 50mm of Point A. Refer Fig 3 (i). (When using option 1 or 2)

   Option 1 - Two front legs shall be formed from one continuous length of tubing and be welded to the sub frame rail (Bar #15) at the bottom at point C and the front corners of the Roof Hoop Bar (Bar #2) at the top.

Option 2 - Two front legs shall be formed from one continuous length of tubing and be welded to the roll cage sub frame (Bar#15) and continue up as the A Leg and be bent toward and welded to the Main Hoop Bar (Bar#1).

Option 3 – Dash Hoop Bar and Roof Hoop Bar. This requires the A Pillar/Front Leg to be formed in two straight pieces. Lower A Pillar/Front Leg to be welded to the Roll Cage Sub Frame bar (Bar #15) at Point C and to the Dash Hoop Bar at Point A. Upper A Pillar/Front Leg to be mounted upwards from Point A to the Roof Hoop Bar and be welded to the front corners of the one-piece Roof Hoop Bar (Bar #2). If using 38x2.6mm tube as the Dash Hoop Bar, the A Pillar/Front Legs will be notched to fit around this tube and be fully welded on all sides. The two pieces of the A Leg must intersect at the same point on the Dash Hoop Bar bend.
The Dash Hoop Bar is the combination of Bars #8, #9, #10 – in one continuous piece.

ALL A-LEG AND ROOF HOOP OPTIONS MUST BE CONSTRUCTED SO AS THE DRIVER CAN ENTER AND EXIT THE CAR THROUGH THE DRIVERS SIDE WINDOW APERTURE AT ALL TIMES. A-LEGS AND OTHER ROLL CAGE BRACING THAT PROTRUDE THROUGH THE DRIVERS SIDE WINDOW APERTURE THAT SIGNIFICANTLY IMPEDE THE DRIVERS ABILITY TO ENTER OR EXIT THE CAR WILL BE DEEMED NON-COMPLIANT.

4. **Centre Roof Bar**: Bar #4
   A one-piece centre roof bar to be welded between the main hoop and the roof hoop, in the centre line of the roll cage.

5. **Main Hoop Centre Spreader Bar**: Bar #5
   Main Hoop Centre Spreader Bar: Bar #5 A one-piece straight bar/or two-piece if Diagonal bar is one piece is to be fitted to the Main Hoop within 50mm of top NASCAR bar height at Point B. Refer to Fig 3 (i). To be connected to the other side of the Main Hoop within 50mm of the top passenger NASCAR door bar. This bar may act as the Seat Back/Shoulder Bar (Bar #6). (01/07/2020)

6. **Seat Back / Shoulder Harness Bar**: Bar #6
   A one piece mounting bar to be fitted to mount the seat and seat belts, to be positioned so that the belts are anchored a maximum of 300mm from the point at which the shoulder belts pass through the back of the seat. Top seat mount to be no further than 75mm lower than this bar.

7. **Main Hoop Diagonal Bar**: Bar #7
   Main Hoop Diagonal Bar: Bar #7 A two piece diagonal brace/or one piece if Main hoop spreader bar is two pieces will be fitted in the roll cage behind the driver's head, within 250mm of the bend and down to the point where it intersects the Main Hoop Centre Spreader Bar (Bar #5). From this point the second piece in the same plane and angle as the top diagonal brace will follow down to the point where the hoop joins the LHS Roll Cage sub frame base. Refer Fig 3 (i). A second diagonal brace may be fitted and may need to be in 3 pieces. All braces must intersect with the Main Hoop Centre Spreader Bar/Diagonal bar. (01/07/2020)

8. **NASCAR Door and Dropper Bars**: Bar #8
   On the driver's side, three one piece horizontal bars that will have a deflection/bend at each end of the bar which allows the NASCAR bars to be positioned towards the door skin and placed between front and rear cage legs, evenly spaced between window sill and roll cage sub frame. Top NASCAR door bar to be within 50mm of the window opening. The centre or bottom horizontal bar may run straight through, from front wheel arch to the rear wheel arch, and then have two separate pieces of 38 x 2.6mm CHS turning to the NASCAR bar connecting to the roll cage Main Hoop Bar and to the 'A Pillar' leg. There will be a minimum of two vertical dropper bars as close to evenly spaced as possible between the front leg, and the rear hoop for each of the openings created by the NASCAR bars, making a minimum of six vertical bars to be fitted. Refer to Fig 3 (i). OEM Door B pillar may be notched ONLY; not removed to allow fitment of bar work.

9. **Passenger Side Door and Dropper Bars**: Bar #9

Passenger side will have a minimum of two one piece bars attached at the Front A pillar legs and the Main Hoop Bar. One of these must be horizontal at window sill height which will be at the same height as the top NASCAR bar on the driver's side. The second bar cannot be vertical.

10. **Lower Windscreen Dash Bar**: Bar #10

A one piece straight bar mounted horizontally between the Front A pillar legs must be fitted within 50mm at top NASCAR bar height.

11. **Centre Windscreen Bar**: Bar #11

A one-piece straight bar is to be fitted at centreline of cage at 90° to and between roof hoop (bar #2) and the lower windscreen bar (bar #10).

12. **Rearward Brace Bars**: Bar #12

GENERAL

Both rearward brace bars options must connect to the rear of the main hoop within 100mm of the centre of the bend and extend rearward at a maximum angle of 45° down from the horizontal attaching to the rear subframe rails or a rear subframe chassis spreader.

Option 1 – two one-piece rearward brace bars free of bends.

Option 2 – a crucifix design with one bar being two pieces. The one-piece bar must be attached to the driver's side. All 3 bars to be free of bends. (01/07/2020)

13. **Foot Protection Bar**: Bar #13

When drivers feet are forward of the front roll cage A pillar leg (bar #3) in race position i.e. accelerator is at W.O.T. (wide open throttle) foot protection is mandatory. See Fig 3 (iii)

Foot protection bar is to attach to the Front A pillar legs (Bar #3) no lower than 300mm from the roll cage sub frame base (bar #15) and protrude forward toward the front firewall / RHS front wheel well and re-attach to the roll cage sub frame base (Bar #15) to protect the drivers feet in the event of side intrusion. See Fig 3 (iii)

Foot protection area to be completely filled with either 3mm mild steel or 5mm aluminium plate. See Fig 3 (iii)

When using a bolt in removable foot protection plate, it is to be attached to the outside of the foot protection bar using a minimum of 4 x 50x50x3mm (square) or 4 x 55x40x6mm (rectangular) mild steel tags attached no further than 200mm apart with 8mm or 5/16" bolts facing inward, spot welded, with no protrusions. The larger the foot protection area, the more tags required. Multi hole or scalloped tags are NOT permitted.

14. **Foot Protection Support Bar**: Bar #14

The foot protection bar is to be braced to substantial bar work to the left. This is to prevent the collapse of the foot protection bar in the event of side intrusion. See Fig 3 (i)

15. **Roll Cage Sub Frame Bar**: Bar #15

Roll cage sub frame bar to be securely welded to body shell at a minimum of 4 points; 2 on each side of car, at a distance no closer together than 500mm. If using the 50x50x2.5mm RHS option, roll cage legs may be inserted into the RHS and fully welded.

OPTION: It is permissible to use a one piece sub frame rail and spreader bar, joined in the centre of the vehicle at the transmission tunnel. Join must use a spigot/sleeve and be plug welded at two locations on both sides of the join with the join fully welded. If the spreader bar part of this option is more than 200mm forward of the A Pillar leg then a support brace (Bar #17) of a minimum 38x2.6mm CHS is to be fitted from the spreader bar to a point no less than 200mm from the front A pillar leg. Refer Fig 3 (ii)

16. **Lower Spreader Bar Front**: Bar #16
A sub frame spreader bar at front A pillar legs bar to be fitted. 200mm is the maximum distance forward or rearward before a brace is required (Bar #17).
Refer also to Option above in Item #15.

17. **Lower Spreader Bar – Front Brace**: Bar #17
If bracing is used must be a minimum of 38x2.6mm CHS and be fitted from the spreader bar to a point no less than 200mm from the A pillar front leg. Refer to Option in Item #15. Refer Fig 3 (ii)

18. **Lower Spreader Bar Rear**: Bar #18
A sub frame spreader bar to be fitted at the base of the Main Hoop Bar (Bar #1). This bar is to be as straight as possible. It is permitted to notch the body shell/transmission tunnel for the fitment of this bar in an endeavour to keep it as straight as possible. If the bar is bent to allow for the transmission tunnel it must be braced vertically to the centre of the centre spreader bar with 25x2.6mm CHS.

19. **Lower Windscreen / Dash Bar Support (optional)**: Bar #19
A bar can be fitted between lower windscreen/dash bar and the front spreader bar.

20. **Seat Base Mounting/Harness Mounting Bar**: Bar #20
A fabricated or formed tubing frame for the mounting of seat base and harness will consist of the following options as a minimum. Tubing may be bent to accommodate fitment.

It is not permitted to drill through these bars for the mounting of seat base without the fitment of sleeves. Refer to image. The use of tabs made out of 3mm minimum mild steel are recommended. All harness tabs to be as per specification. Refer to Class Technical Manual for tab specification.

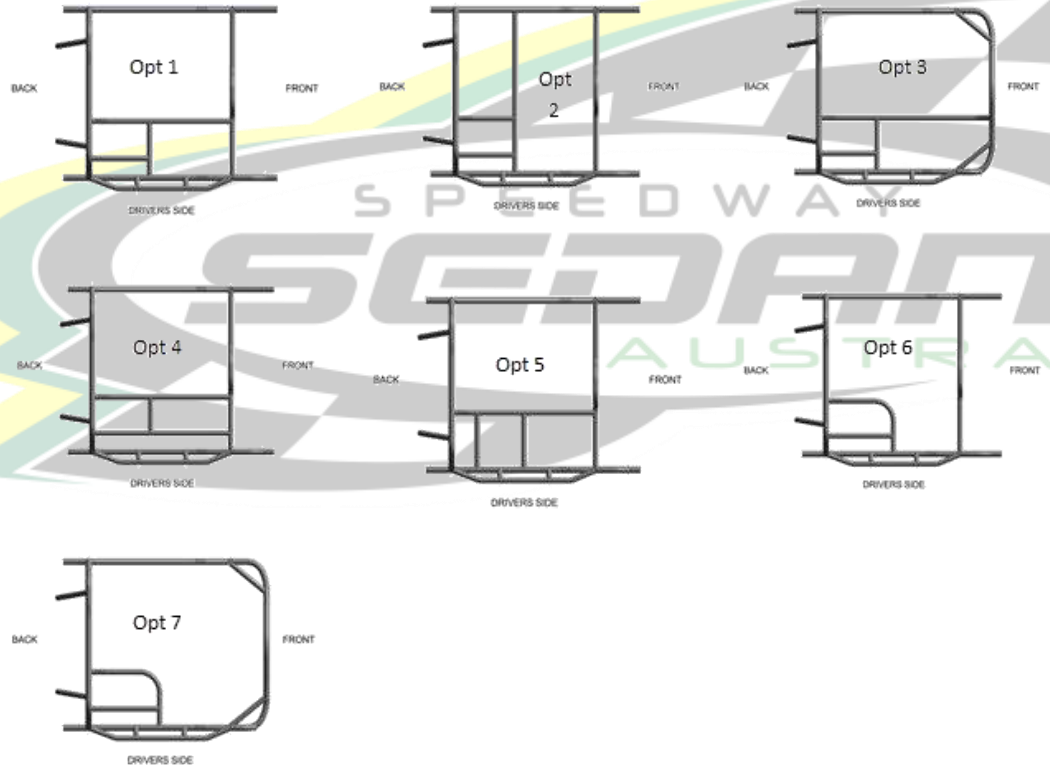

21. **Rear Chassis Sub Frame Rail: Bar #21**

Rearward of the roll cage to where sub frame rails intersect with the rearward brace bars and incorporate bumper supports and mounts are to be either 44.45 x 2.6mm CHS or 38x2.6mm CHS or 40x40x2.5mm RHS. Rearward sub frame bars to be symmetrical to the common centreline of the car.

22. **Front Chassis Sub Frame Rail – OPTIONAL: Bar #22**

Forward of the roll cage to where sub frame rails intersect with and incorporate bumper supports and mounts are to be 38x2.6mm CHS or 40x40x2.5mm RHS or 50x25x3mm RHS.

23. Additional Optional Roll Cage Supports/Bracing:

Other additional optional roll cage supports or braces are permitted and are to be a minimum of 25x2.6mm CHS.

24. Windscreen Mesh: Mesh screen is to cover the entire area from A Pillar front leg (Bar #3) to Centre Windscreen (Bar #11) and from top of dash panelling to Roof Hoop Bar (Bar #2).

(i) Maximum effective mesh size 50x50mm mild steel. Mesh gauge 3mm.

(ii) Windscreen mesh to be welded or clamped with metal clamps to the roll cage A Pillar front leg (Bar #3) and Centre Windscreen bar (Bar #11).

(iii) Minimum of 4 (four) clamps.

(iv) Mesh may be welded to body of Mono cars.

25. Anti-Spear Plates: 3mm steel or 5mm aluminium (NOT to be lightened by any means)

(i) The anti-spear plates to be mounted to the outside of the NASCAR bars and overlap the edge of the NASCAR bar work.

(ii) Recommended 1/3 length between roll cage legs, to be fitted on the driver's side, from base of roll cage to top NASCAR bar, forward of the first vertical door dropper bar to the front leg of the roll cage.

(iii) If not welded, three external door plates to be bolted on, using a minimum of 6 – 50x50x3mm (square) or 55x40x6mm (rectangular) mild steel tags and bolted to either 8mm or 5/16" high tensile bolts with no protrusions.

(iv) If individual pieces are used then a minimum of 4 – 50x50x3mm (square) or 55x40x6mm (rectangular) mild steel tags and bolted to either 8mm or 5/16" high tensile bolts with no protrusions.

(v) Plates/tags to be solid square or rectangular with one only hole for the mounting bolt.

26. FUEL TANK PROTECTION BAR: Bar #26 (01/07/2020)

Bar must be constructed of minimum 38x2.6mm CDS or 40x40x3mm RHS with 25x2.6mm CDS minimum angled brace bars to be fitted on each side and be 25mm clear all-around tank and filter, projecting a line from the rear wheel centre to the bar.

Note - only applicable to dual registered Street Stocks and require a Fuel Tank Protection bar.

27. HEAD PLATE

A minimum of 50mm clearance is required between the helmet, including fresh air intakes and associated fixtures, to any part of the head plate and roll cage when the driver is seated and harnessed. (01/07/2020)

REMOVABLE STYLE

a) Head plate to be of 5mm aluminium or 3mm mild steel (NOT to be lightened by any means).

b) Plate to be mounted from above and be proud of main hoop (bar #1), centre roof bar (bar #4) and side of roof bar (bar #2) as per Fig 4, with 10 mild steel Plate Tabs of 50x50x3mm (square) or 55x40x6mm (rectangular) will be required when using a removable Head Plate.

c) Plate to be mounted, from above, with 10 x 8mm dia. High Tensile bolts, 3 each side, 2 front, 2 rear. Heads of bolts to be downwards and spot welded e.g. no protrusions.

d) Plate tabs to be solid square or rectangular with one only hole for the mounting bolt.

Fig 4. Head Plate

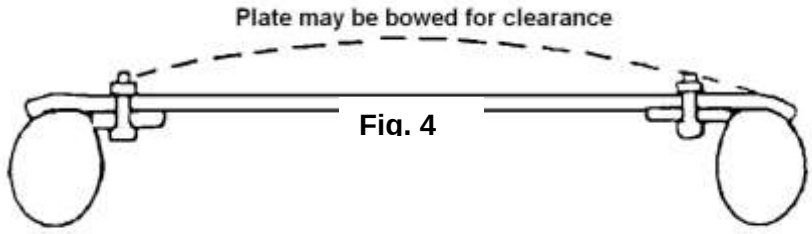

NON REMOVABLE STYLE

A full size 3mm mild steel head plate may be fully welded to top of Main Hoop bar (Bar #1), centre roof bar (Bar #4) and side of roof bar (Bar #2) using practice as outlined in General Item g).

NATIONAL 4 ONLY

CHASSIS

MATERIAL SPECIFICATION

A. Minimum Cold Drawn Seamless (CHS) mild steel tube with a minimum tensile strength of 350 MPA. Unless otherwise specified. (01/07/2020)

B. Where RHS is permitted all tube to be mild steel with a minimum tensile strength of 350 MPA

MINIMUM DIMENSIONS

As per Section 2 Roll Cage - MINIMUM DIMENSIONS TABLE except for VEHICLES WITH ORIGINAL OEM FRONT CHASSIS RAILS REMOVED IN FRONT OF FIREWALL. See Below: (01/07/2020)

A. 50x50x2.5mm RHS

B. 40x40x3mm RHS (01/07/2020)

C. 44.45x2.6mm CHS

GENERAL (01/07/2020)

1. Front and rear chassis rails to be built to a professional and safe standard with adequate bracing 38x2.6mm CHS maximum. The rear chassis rails must be no further vertically than 300mm from the foot of the main hoop and be either stepped down to connect with chassis/roll cage at a point in line with the main hoop or connected to main Roll Cage hoop and be adequately braced.
2. A crush zone must be also constructed between front bumper and front chassis rails minimum 150mm.
3. The bar work between the chassis rails from within the engine bay to the rear of the boot compartment, other than minimum bar work is free using up to maximum chassis bar material.
4. Except for the bumper, bumper support bars, chassis to A pillar roll cage leg and suspension mounting points, all bars work outside the front chassis rails to be a maximum of 25x2.5mm RHS or 25x2.6mm CHS. Suspension points may be fabricated using chassis bar materials as a maximum.

VEHICLES WITH ORIGINAL OEM FRONT CHASSIS RAILS REMOVED IN FRONT OF FIREWALL

1. If original front chassis rails are removed forward of front fire wall a fabricated chassis stepped and angled down minimum 75mm when viewed from the side elevation to create a crush zone to be fabricated using A. 50x50x2.5mm RHS or B. 40x40x3mm RHS or C. 44.45x2.6mm CHS. See figure 3(iv). (01/07/2020)
2. Chassis bars to be either under, through or above the floor. If through the floor the floor must be professionally welded to chassis rails and sealed. The chassis rails must be connected to the roll cage base at a minimum of 4

points to include fore and aft using chassis bar material and be adequately braced/gusseted to prevent collapse of chassis/cabin area.

3. As a minimum the front chassis rails to be braced to the A pillar roll cage leg no lower than 400mm from the roll cage sub frame rail 38x2.6mm CHS. If joining RHS to RHS the joint is to be plated (Fish plate) using a minimum of 40x2.5mm x 40mm *minimum* flat mild steel plate. (01/07/2020)

Note – These are the minimum standards and all times the construction must be built to a safe and professional standard.

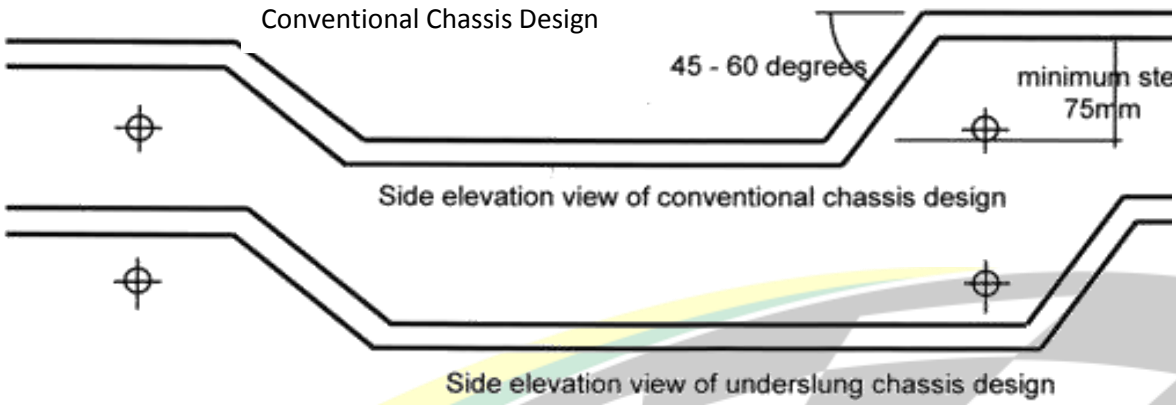

Underslung Chassis Design