ROLL CAGE

MATERIAL & DESIGN

OPTION

Effective for registration

Commencing

1st July 2019

Speedway Sedans Australia

SSA SUPER SEDANS

Updated 01.07.2020

SECTION 2 ROLL CAGE – SSA SUPER SEDANS

GENERAL

a) The roll cage is to provide a safe enclosed environment for the driver and is intended to prevent the collapse of the cabin area under impact.
b) The roll cage is to fully enclose the driver with the roll bar tubing that constitutes a cage type framework, braced fore and aft.
c) The cage must extend behind the driver's seat and forward to the windscreen area and incorporate adequate foot protection.
d) All A-leg and roof hoop options must be constructed so as the driver can enter and exit the car through the driver's side window aperture at all times. A-legs and other roll cage bracing that protrude through the driver side window aperture that significantly impedes the driver's ability to enter or exit the car will be deemed non-compliant. (01/07/2020)
e) All bends to be made using a bender with the correct size former using a cold working process with no evidence of crimping, wall failure or significant weakening. The centreline bend radius must be 3 times the tube diameter. If during the bending process the tubing is ovalized the ratio of minor to major diameter must be 0.9 or greater.
f) All bars to be suitably notched to accommodate correct assembly of roll cage.
g) All welding is to be of a high quality with adequate penetration using only gas shielded arc welding techniques. E.g. mig or tig. All joints to be fully welded.
h) Sonic Testing to be performed only on bare/unpainted surfaces and on a straight section of tube. It is the owner's responsibility to remove paint/powder coating if required. (Sonic Test at not less than 2.40mm ABSOLUTE) (01/07/2020)
i) Roll cage is to be symmetrical about a common centreline through the front chassis rails and cabin chassis area and be full height of the cabin chassis area.
j) Rear rail lateral location shall be placed at manufacturer's discretion. The minimum distance between the rails shall be 736mm (29 inches)
k) All bar work shall be inside the body. Roof area of the cage shall be a minimum 765mm long and 1065 mm wide as measured to outside of roof hoop bar. Floor area shall be minimum 900mm x 1445mm.

MATERIAL SPECIFICATION

a) Please refer to Minimum Dimensions Table below for bar size and types.
b) Minimum Cold Drawn Seamless (CHS) mild steel tube with a minimum tensile strength of 350 MPA. Unless otherwise specified. (01/07/2020)
c) Where RHS is permitted all tube to be of AS1163 standard mild steel with a minimum tensile strength of 350 MPA.
d) No galvanising on any tube allowed.
e) All tube must display good elongation and welding properties.

DIMENSIONS TABLE

Bar #1	Main Hoop Bar	44.45 x 2.6mm	CHS
Bar #2	Roof Hoop Bar	44.45 x 2.6mm	CHS
Bar #3	Front A Legs / A Pillar Bar	44.45 x 2.6mm	CHS
Bar #4	Centre Roof Bar	38 x 2.6mm	CHS
Bar #5	Main Hoop Diagonal Bars	38 x 2.6mm	CHS
Bar #6	Main Hoop Centre Spreader Bar/Seat Back/Shoulder Harness Bar	38 x 2.6mm	CHS
Bar #7	NASCAR Door and Dropper Bars	38 x 2.6mm	CHS
Bar #8	Door Bars	38 x 2.6mm	CHS
Bar #9	Lower Windscreen Dash Bar	38 x 2.6mm	CHS
Bar #10	Centre Windscreen Bar	25 x 2.6mm	CHS
Bar #11	Rearward Brace Bars	38 x 2.6mm	CHS
Bar #12	Foot Protection Bar	38 x 2.6mm	CHS
	Chassis Design Option – Through Rails – these 3 choices are the only size and types of material accepted (01/07/2020)	38 x 2.6mm 40 x 40 x 3mm 50 x 50 x 1.6mm	CHS RHS RHS
	Chassis Design Option – Crucifix – these 2 choices are the only size and types of material accepted (01/07/2020)	38 x 2.6mm 50 x 50 x 1.6mm	CDS RHS

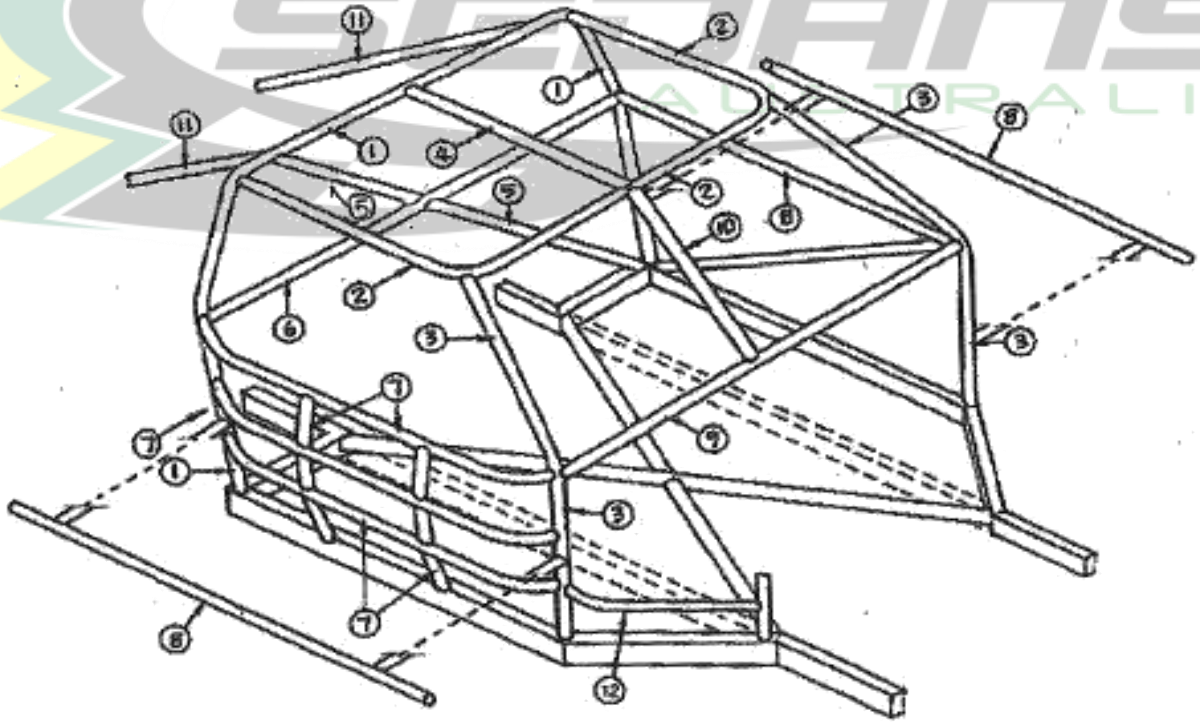

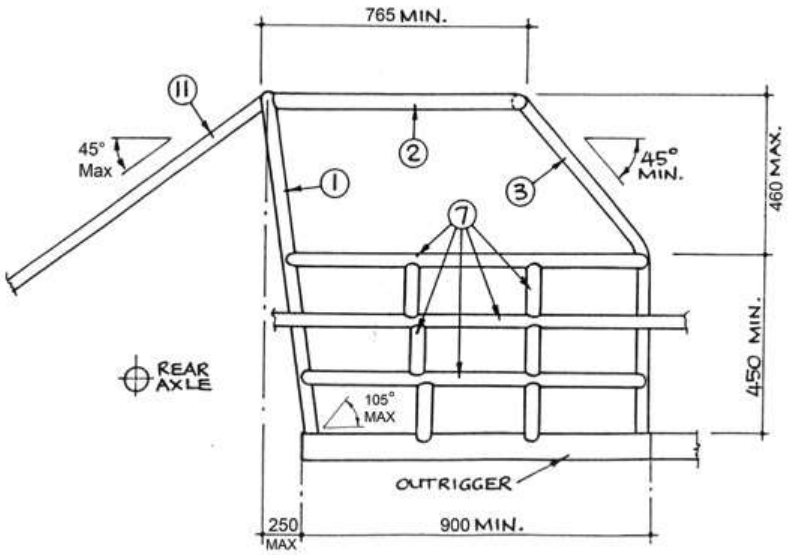

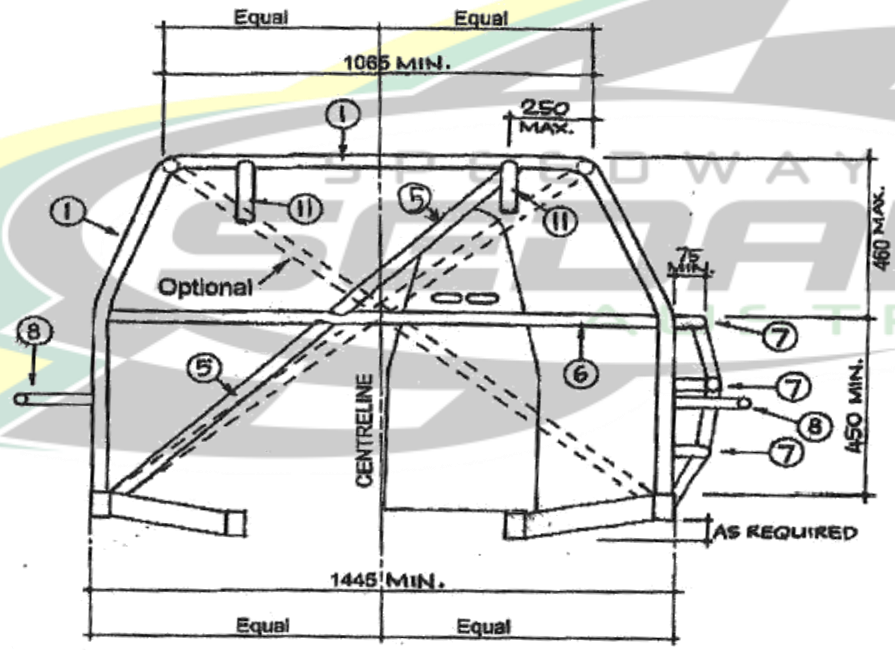

Note. Drawing for display purposes only. Refer to text for clarification on all drawings

1. **Main Hoop Bar:** Bar #1

The rear main hoop shall be formed from one continuous length of tubing with smooth continuous bends and no evidence of crimping, wall failure or significant weakening. Rear main hoop to be welded to the top of chassis outriggers. The rear main hoop may slope back away from vertical a maximum of 15 degrees.

2. **Roof Hoop Bar**: Bar #2

The roof hoop shall be formed from one continuous length of tubing and be welded to the main hoop to form around the driver's head. Alternatively, the roof hoop may be replaced by using one continuous piece of tube to form the front leg and A pillar which then continues back to the main hoop. The alternate roof hoop shall be completed by the installation of a spreader bar across the top of the windscreen.

3. **Front A Legs/A Pillar bar**: Bar #3 (01/07/2020)

GENERAL

The A pillar part of the front legs MUST BE GREATER than 45° (Bar #3) (See Drawing). The minimum distance between the front leg and the rear main hoop where they connect to the chassis outrigger shall be 900mm. This is measured outside to outside of the front leg and the rear main hoop bars.

Option 1 – Two front legs shall be formed from one continuous length of tubing and be welded to the Chassis Outriggers at the bottom and front corners of the Roof Hoop Bar (Bar #2) at the top.

Option 2 – Roof Hoop Bar (Bar #2) to be formed from one continuous length of tubing and be welded to the Chassis Outriggers and continue up as the A Leg and be bent towards and welded to the Main Hoop Bar (Bar #1).

Option 3 – Dash Hoop Bar and Roof Hoop Bar – this requires the A Pillar/Front Leg to ne formed in 2 straight pieces. Lower A Pillar/Front Leg to be welded to the Chassis Outrigger at Point C and to the Dash Hoop Bar at Point A. Upper A Pillar/Front Leg to be mounted from Dash Hoop Bar upwards from Point A to the Roof Hoop Bar and be welded to the front corners of the one-piece Roof Hoop Bar. If using 38x2.6mm CHS tube as a top Dash Hoop Bar, the legs will be notched to fit around this tube and be fully welded on all sides. The two pieces of the A Leg must intersect at the same point on the Dash Hoop bend. The Dash Hoop Bar is the combination of Bars #7, #8 and #9 – in one continuous piece.

ALL A-LEG AND ROOF HOOP OPTIONS MUST BE CONSTRUCTED SO AS THE DRIVER CAN ENTER AND EXIT THE CAR THROUGH THE DRIVERS SIDE WINDOW APERTURE AT ALL TIMES. A-LEGS AND OTHER ROLL CAGE BRACING THAT PROTRUDE THROUGH THE DRIVER SIDE WINDOW APERTURE THAT SIGNIFICANTLY IMPEDES THE DRIVERS ABILITY TO ENTER OR EXIT THE CAR WILL BE DEEMED NON-COMPLIANT.

4. **Centre Roof Bar**: Bar #4

Centre roof bar shall be welded between the main hoop and the roof hoop in the centreline of roll cage.

5. **Main Hoop Diagonal Bar**: Bar #5

A diagonal brace will be fitted in the main roll cage hoop behind the driver's head, within 250mm of the corner and down onto the left side chassis rail or roll cage leg. (Top right to Bottom left)

OPTION - Rear Diagonal – A second diagonal shall be fitted in the main roll cage extending from the top left hand corner down onto the right hand side chassis rail or roll cage leg. (top left to bottom right)

6. **Main Hoop Spreader Bar/Seat Back Support/Shoulder Harness Bar**: Bar #6

One continuous piece of tube shall be fitted between the legs of the main hoop within 50mm of the top nascar bar height on either side. The spreader bar may be used as the seat belt anchor point provided that the belts

are anchored a maximum of 300mm from the point at which the shoulder belts pass through the back of the seat. Top seat mount to be no further than 75mm lower than this bar.

7. **NASCAR Door and Dropper Bars**: Bar #7

NASCAR bars shall be fitted to the driver's side between the down leg of the main hoop and the front leg. The NASCAR bars shall consist of three horizontal side bars, curved out toward the door skin. One of the three bars may run straight through from the front wheel arch to the rear wheel arch and shall have two separate pieces turning at 90 degrees to connect onto the front leg and rear main hoop. There shall be a minimum of two bars evenly spaced between front leg and main hoop bar for each of the openings created by the horizontal NASCAR bars making a minimum of six bars to be fitted. E.g. Minimum 2 vertical bars between the top NASCAR bar and the NASCAR bar and the middle NASCAR bar, minimum 2 vertical bars between the middle NASCAR bar and the bottom NASCAR bar and a minimum of 2 vertical bars between the bottom NASCAR bar and the outrigger.

8. **Door Bars**: Bar #8

Passenger side shall have a minimum of two bars between front and rear roll cage legs. The top one must be horizontal and be the same height as top drivers side NASCAR bar. The second one must be waist height. Diagonal bracing in the passenger door area is optional. The driver's side door bar must be waist (widest part of door) height.

9. **Lower Windscreen Dash Bar**: Bar #9

Lower windscreen and dash bar shall be a horizontal bar joining the front cage legs at top door bar and top NASCAR bar height.

10. **Centre Windscreen Bar**: Bar #10

A continuous piece of tube shall be fitted at centreline of roll cage at 90 degrees to & between the roof bar and the lower windscreen bar to intersect with the centre roof bar.

11. **Rearward Brace Bars**: Bar #11

General (01/07/2020)

Both rearward brace bars options must connect to the rear of the main hoop within 250mm of the centre of the bend and extend rearward at a maximum angle of 45° down from the horizontal attaching to the rear chassis rails or rear chassis spreader.

Option 1 – two one-piece rearward brace bars free of bends.

Option 2 – a crucifix design with one bar being two pieces. The one-piece bar must be attached to the driver's side. All 3 bars to be free of bends.

12. **Foot Protection Bar**: Bar #12

Foot protection bar to extend from drivers side front leg around to engine support bar or front chassis rail. The foot protection bar shall provide maximum protection to the driver's feet and legs in front of the foot well.

CHASSIS DESIGN OPTIONS

THROUGH RAILS- The through Rails shall be one continuous length. Approved materials: 38 x 2.6mm CDS CHS, 40 x40 x 3mm RHS Minimum and 50 x 50 x 1.6mm RHS Minimum.

CRUCIFIX- The crucifix approved materials are; 38 x 1.6 CDS CHS and 50 x 50 x 1.6 RHS minimum. The crucifix shall terminate within 125mm of chassis outrigger. (01/07/2020)

Windscreen Mesh: Mesh screen is to cover the entire area from A Pillar front leg (Bar #3) to Centre Windscreen (Bar #10) and from top of dash panelling to Roof Hoop Bar (Bar #2).

(i) Maximum effective mesh size 50x50mm mild steel. Mesh gauge 3mm.

(ii) Windscreen mesh to be welded or clamped with metal clamps to the roll cage A Pillar front leg (Bar #3) and Centre Windscreen bar (Bar #10).

(iii) Minimum of 4 (four) clamps.

Anti-Spear Plates: 3mm steel or 5mm aluminium (NOT to be lightened by any means)

(i) The anti-spear plates to be mounted to the outside of the NASCAR bars and overlap the edge of the NASCAR bar work.

(ii) Recommended 1/3 length between roll cage legs, to be fitted on the driver's side, from base of roll cage to top NASCAR bar, forward of the first vertical door dropper bar to the front leg of the roll cage.

(iii) If not welded, three external door plates to be bolted on, using a minimum of 6 – 50x50x3mm (square) or 55x40x6mm (rectangular) mild steel tags and bolted to either 8mm or 5/16" high tensile bolts with no protrusions.

(iv) If individual pieces are used then a minimum of 4 – 50x50x3mm (square) or 55x40x6mm (rectangular) mild steel tags and bolted to either 8mm or 5/16" high tensile bolts with no protrusions.

(v) Plates/tags to be solid square or rectangular with one only hole for the mounting bolt.

HEAD PLATE

A minimum of 50mm clearance is required between the helmet, including fresh air intakes and associated fixtures, to any part of the head plate and roll cage when the driver is seated and harnessed. (01/07/2020)

REMOVABLE STYLE

a) Head plate to be of 5mm aluminium or 3mm mild steel (NOT to be lightened by any means).

b) Plate to be mounted from above and be proud of main hoop (bar #1), centre roof bar (bar #4) and side of roof bar (bar #2) as per Fig 4, with 10 mild steel Plate Tabs of 50x50x3mm (square) or 55x40x6mm (rectangular) will be required when using a removable Head Plate.

c) Plate to be mounted, from above, with 10 x 8mm dia. High Tensile bolts, 3 each side, 2 front, 2 rear. Heads of bolts to be downwards and spot welded e.g. no protrusions.

d) Plate tabs to be solid square or rectangular with one only hole for the mounting bolt.

Fig 4. Head Plate

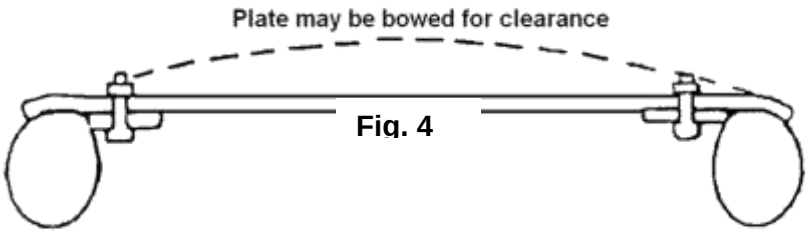

Fig. 4

NON REMOVABLE STYLE

A full size 3mm mild steel head plate may be fully welded to top of Main Hoop bar (Bar #1), centre roof bar (Bar #4) and side of roof bar (Bar #2) using practice as outlined in General Item f).
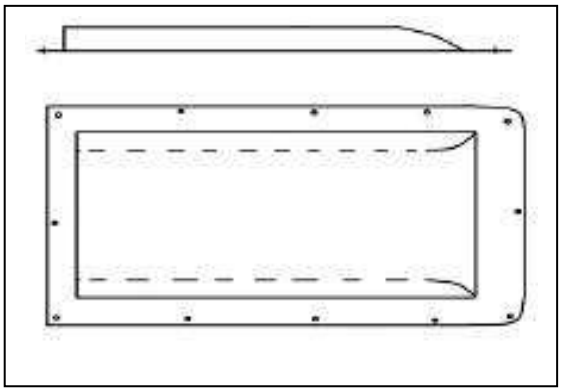
Alternatively, the head plate may be fabricated to provide head clearance drawing below.